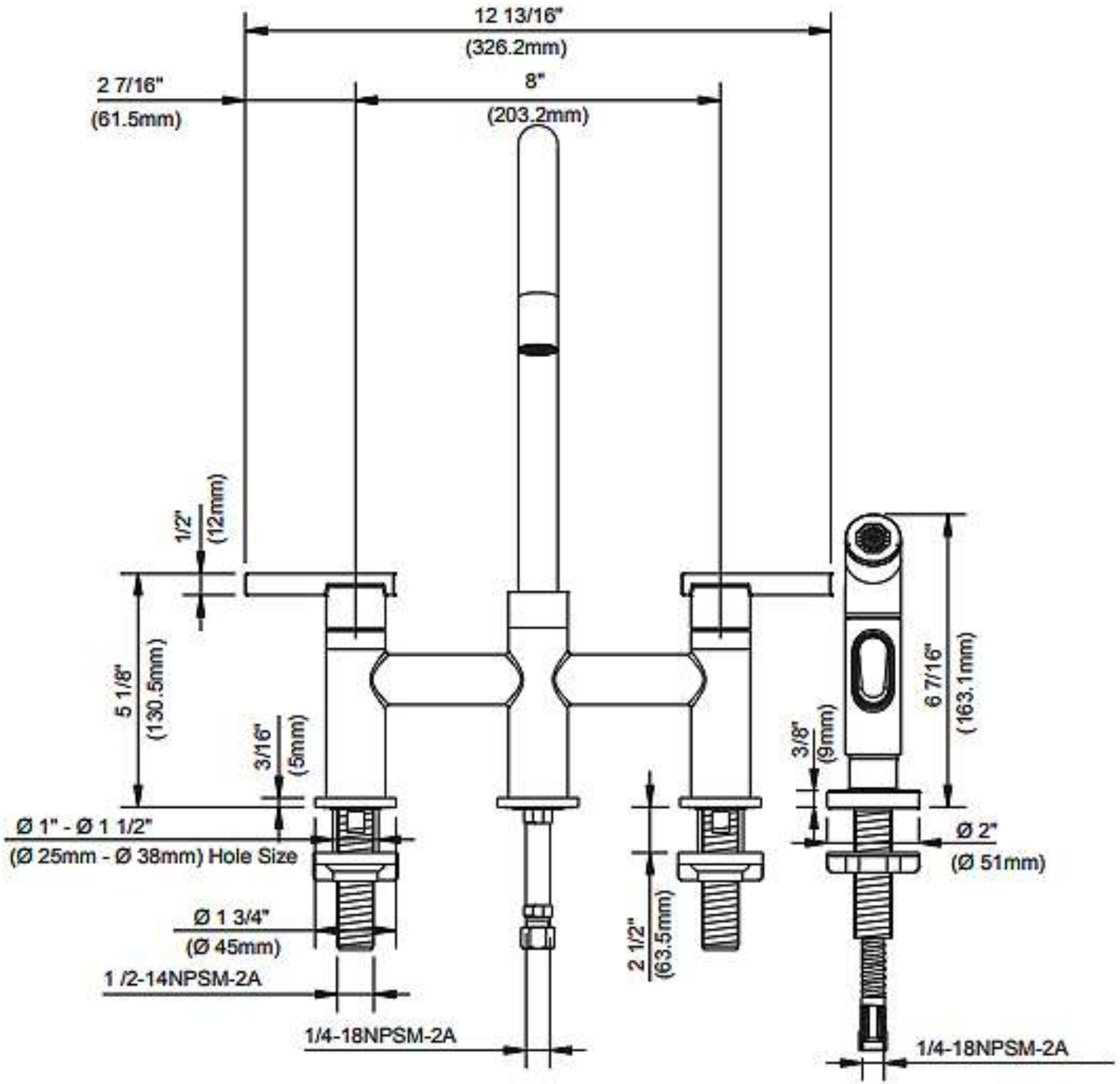
12 13/16"
(326.2mm)
2 7/16"
(61.5mm)
8"
(203.2mm)
1/2"
(12mm)
5 1/8"
(130.5mm)
3/16"
(5mm)
Ø 1" - Ø 1 1/2"
(Ø 25mm - Ø 38mm) Hole Size
Ø 1 3/4"
(Ø 45mm)
1 /2-14NPSM-2A
1/4-18NPSM-2A
2 1/2"
(63.5mm)
6 7/16"
(163.1mm)
3/8"
(9mm)
Ø 2"
(Ø 51mm)
1/4-18NPSM-2A

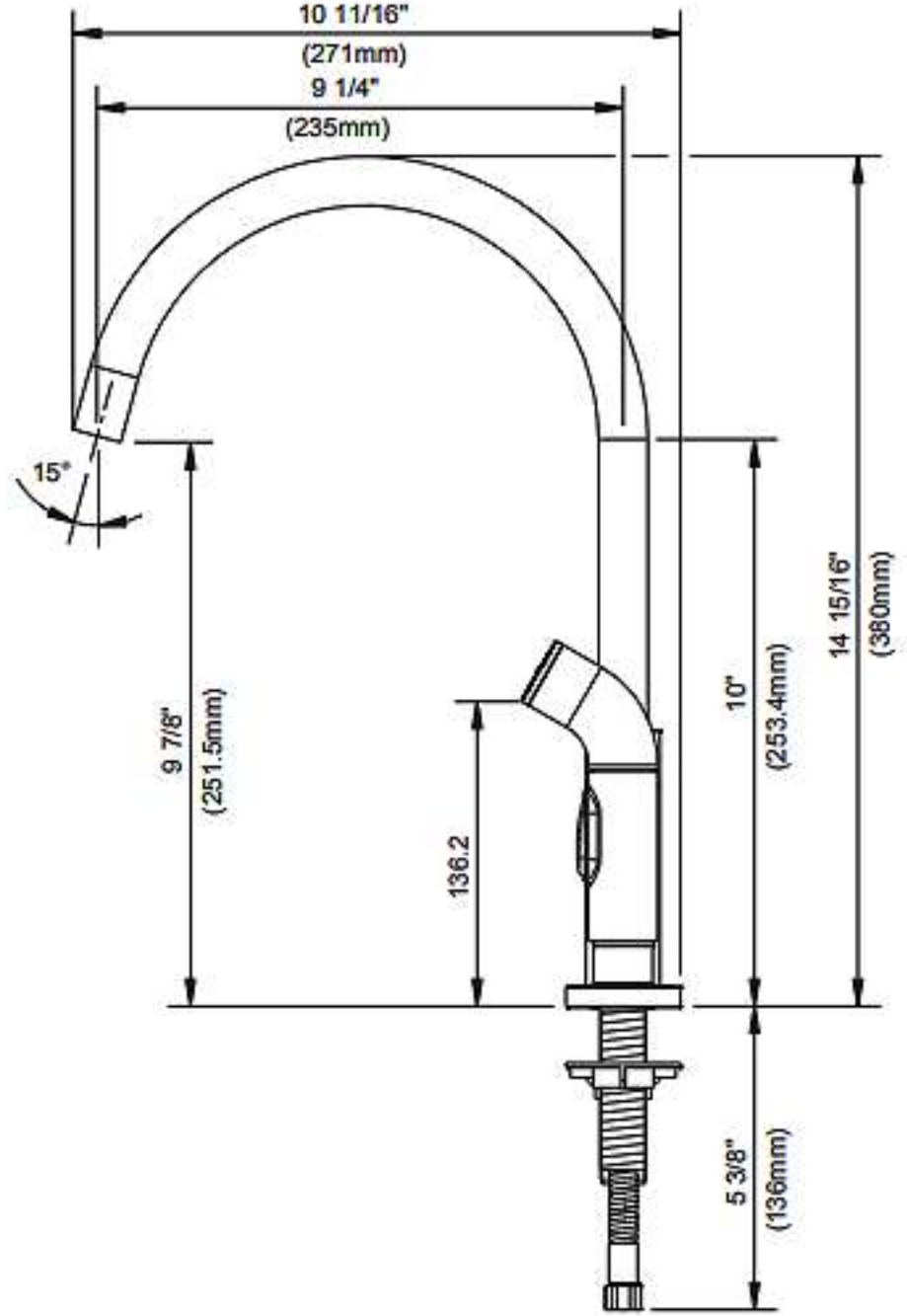
10 11/16"
(271mm)
9 1/4"
(235mm)
15°
9 7/8"
(251.5mm)
136.2
10"
(253.4mm)
14 15/16"
(380mm)
5 3/8"
(136mm)