www.healthcraftproducts.com

Invisia™ Towel Bar

Installation Instructions: INV-TB16-BS / INV-TB16-CP
INV-TB24-BS / INV-TB16-CP

THANK YOU...

Thank you for purchasing the Invisia™ Towel Bar. We are confident that you will find the unique design and durable construction of this product to be of great assistance in your daily routine.

To fully enjoy your Invisia™ Towel Bar, please take a few moments to read these instructions. You should store these instructions in a safe place for future reference.

⚠ SAFETY CONSIDERATIONS

CAUTION: It is your responsibility to see that your Invisia™ Towel Bar is properly assembled, installed, and cared for. Failure to follow instructions in this manual could result in serious injury. Support rails can be slippery when wet - use this product with caution.

INVISIA™ TOWEL BAR INSTALLATION
The Invisia™ Towel Bar should only be installed in areas where the mounting surface is structurally sound. Strengthening modifications may be required (see page 3 for details). Should not be installed in fiberglass / acrylic shower enclosures with insufficient stiffness and strength. Should not be installed into metal studs. If you are not equipped to undertake the outlined work we recommend that you have your Invisia™ Towel Bar installed by a qualified contractor. **Suggested maximum user weight of support rail is 500lbs/227kg, however this rating is conditional upon suitable fasteners and supporting surface.**

WARRANTY

All HealthCraft™ Products are covered by a one year limited warranty with the exception of hand grips which are subject to normal wear. Buyer hereby indemnifies, agrees to hold harmless and defend HealthCraft™ Products Inc. from and against any and all liabilities, claims, (founded and unfounded), losses, damages, costs and expenses (including without limitation consequential damages and reasonable professional fees) resulting from buyers specification, application, or improper use of goods described hereon; buyers omission or neglect.

HealthCraft™ Products Inc. does not assume any liability for damage resulting from services performed by others or faulty installation, misuse or misapplication of goods sold by HealthCraft™ Products Inc.

HealthCraft™ Products Inc. shall not be liable for prospective profits or special, indirect, or consequential damages, or for the cost of any corrective work done without HealthCraft™ Products Inc. prior approval. HealthCraft™ Products Inc. total liability hereunder shall in no event exceed the purchase price of the goods specified hereon.

TOOLS REQUIRED

- Level
- Hammer
- Stud Finder
- Personal Protective Eyewear
- Carbide tip drill suitable for tile
- Protective blanket

FASTENERS: INSTALLATION & MAINTENANCE

The Invisia™ Towel Bar must be secured to the wall with fasteners appropriate to the structural material. Included are 2 sets of mounting hardware for different wall applications. Inspect, or have inspected (and tighten if necessary) the screws on a monthly basis. See Page 3 for structural reinforcement suggestions. Supplied SnapToggles® can be used (in conjunction with a wood screw into suitable structure) as an alternative to structural reinforcement - ONLY if the walls have not been compromised and are judged to be suitably structural (1/2" drywall, or tile walls on 1/2" min cement board).

★ FULL MOUNTING STRUCTURE ★ (RECOMMENDED)	PARTIAL MOUNTING STRUCTURE AVAILABLE	NO MOUNTING STRUCTURE AVAILABLE
All mount points fasten into structural wood (wood studs, reinforced wood framing, etc.)	Minimum one (center) mount point fastens into structural wood; no structure available for other mount points	None of the mount points align with the available structure
#10 x 2" S/S Screw and Lock Washer (into wood)	#10 x 2" S/S Screw and Lock Washer (into wood) + SnapToggles® with #10 x 2" S/S Bolts (for areas w/o structure)	**WE DO NOT RECOMMEND THIS PRODUCT BE INSTALLED USING ONLY SNAP TOGGLES®.**
500lbs load capacity	350lbs load capacity	**N/A**

TIPS FOR DRILLING INTO TILE

• Use carbide tipped masonry drill on ceramic, or consider a diamond tip drill for porcelain tile.

• If possible, drill a smaller pilot hole first.

• Be careful to prevent the drill from moving when you first start it rotating - use duct tape or a wood guide on the surface of the tile to hold the drill from walking sideways.

• A variable speed drill on slow is best to start the hole. Do not apply too much pressure when drilling. Do not use a hammer drill.

WATERPROOFING

Although mounting hardware includes rubber gasket washer, we recommend that sealant be applied around the wall contact points for any products mounted in the shower. If not properly sealed, there is the potential for water to seep into the wall. This may cause the wood to rot, thus compromising the structure the support rail is attached to.

MOUNTING LOCATION

We strongly recommend that you give some thought as to the optimal location of your Invisia™ Towel Bar before installation. The following suggestions are offered for your consideration, however, it is recommended to consider advice from the appropriate healthcare professional for locating any support rail.

To determine the optimal location, we recommend holding the rail in place and walking through the motions of a transfer (sitting, standing, reaching, etc.). Consider the following when determining the optimal mounting location:

1. If possible, move mounting location to match structure behind the wall.
2. Avoid electrical / plumbing behind the wall.
3. Where possible, drill through tile - not through grout.

INVISIA™ TOWEL BAR INSTALLATION

Place a blanket down in the area that you will be installing the Invisia™ Towel Bar to protect the shower or bathtub surfaces from parts that may fall during installation. The proposed mounting location must be cleaned prior to installation.

Refer to the fastener chart on page 1 to determine the size of hole required for the appropriate wall construction.

A1. Mark the horizontal and vertical location of the Invisia™ Towel Bar.

A2. Using supplied hex-key, back off set screws in the rail sockets so the wall stems can move in and out freely as shown in **Figure 2a and 2b**.

A3. On back of wall stems, peel off backing to expose adhesive side of rubber gasket washer.

A4. With the wall stems inside the rail sockets , push rail firmly against wall in marked location as shown in **Figure 3a**.

A5. Remove the rail as straight as possible as to not pull the wall stems off from the wall as shown in **Figure 3b**. **NOTE:** The peel and stick is not meant to be a permanent adhesive.

A6. Use the wall stem as a locating guide and notch the tile accurately with supplied center punch as shown in **Figure 4. NOTE:** A light tap is all that is required for punch to make notch.

A7. Use the appropriate drill bit on the notched tile to drill a pilot hole for the fasteners. If SnapToggle® toggle bolts are to be used, please see the separate installation instructions. Continue with step A8.

A8. Fasten the wall stems to the wall with the appropriate fasteners & waterproofing.

A9. Place the rail back onto the wall stems, and secure rail by tightening the set screws with supplied hex key as shown in **Figure 5**. The rail will pull into the stems as the set screws are tightened.

The rail will fit best if placed as straight as possible over the wall stems. If the rail sockets do not easily fit onto the wall stems at first, this can be adjusted. There is some movement possible with the oversized hole of the wall stems, and the location of the wall stems can be adjusted to accommodate the rail sockets.

NOTE: Perform a final tighten and inspection of all fasteners. Test the installation by vigorously pulling on the support handle of the Invisia™ Towel Bar.

Your Invisia™ Towel Bar installation is now complete.

Figure 1.

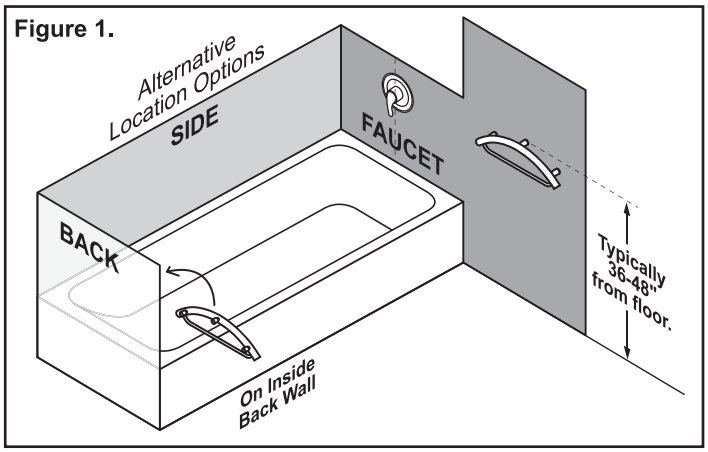

Figure 2a.

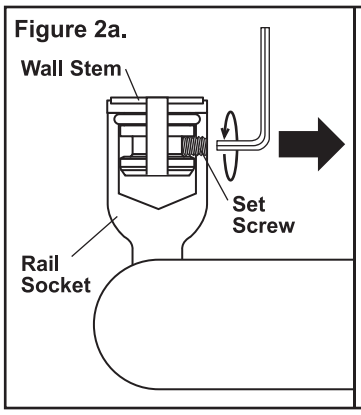

Figure 2b.

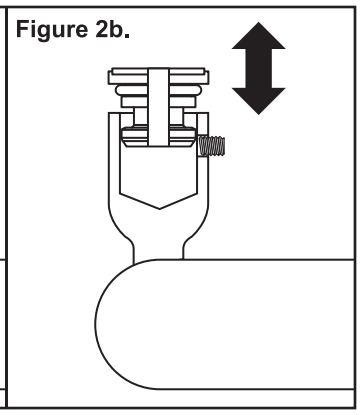

Figure 3a.

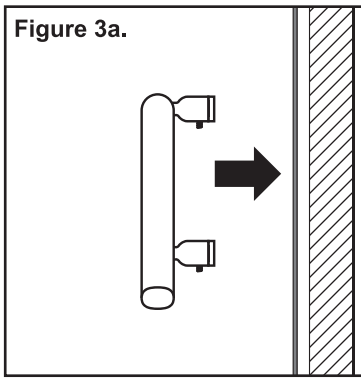

Figure 3b.

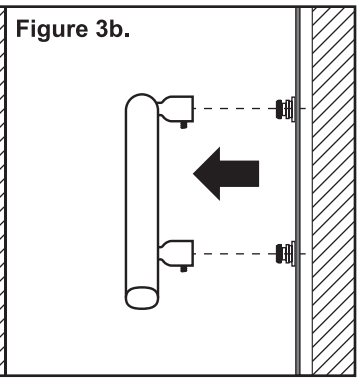

Figure 4.

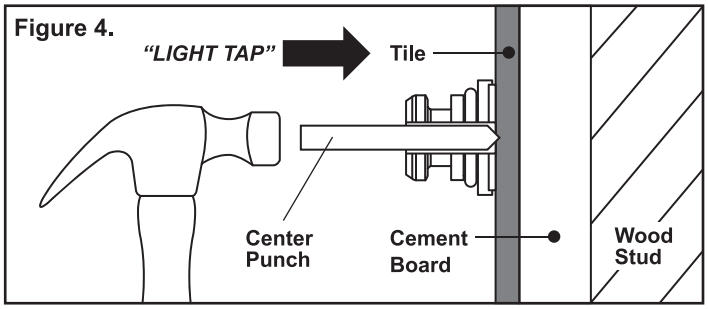

Figure 5.

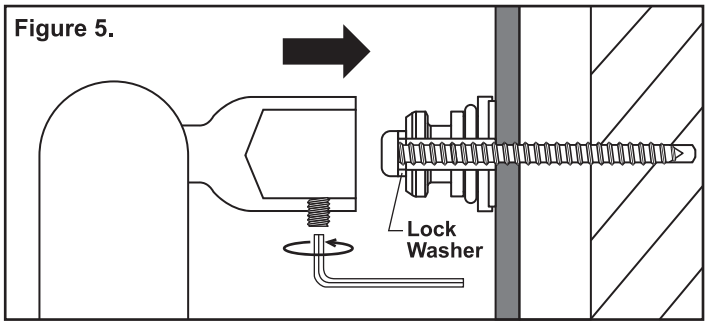

TIPS FOR LOCATING A WOOD STUD

• For drywall surfaces, use a stud sensor to locate a stud.

• For tile surfaces, try a stud sensor to locate a stud. If no stud is found, measure 16" from a perpendicular wall. Drill a small hole in the grout to ensure the stud has been found. If there is no stud at this location, bend a piece of wire in a “L” shape and insert it through the hole. Spin the wire to determine exactly where the stud is located and mark its location. Patch all holes with silicone to keep moisture out of the wall.

• If there is access to the backside of the bathroom wall (i.e. through a closet), measure the stud location and transfer the measurements into the bath area.

STRUCTURAL REINFORCEMENT SUGGESTIONS

NOTE: *Due to variances in local construction methods and materials used, details given below are suggestions only. Consult the appropriate local contractor for specific advice. For concrete walls, you may be able to install fasteners (such as a wedge anchor) directly into the concrete wall without modification.*

If there is access to the backside of the bathroom wall (i.e. through a closet) and structural reinforcement is required, consider cutting a hole in this backside wall to allow access to the bathroom wall from behind (without having to remove / replace ceramic tiles).

1. Choose optimal mounting location of rail , including height (H) and side to side location (L) as shown in **Figure 1a**. Mark the height and location on the wall for future reference. **NOTE:** If accessing the bathroom wall from the backside, transfer the measurements for the support rail location to the backside wall as shown in **Figure 1b**.

2. Find wall support studs & cut hole in wall board to expose wall studs as shown in **Figure 2a**. Suggested hole size is height (A) of 18-24" (48-61cm) and width (B) corresponding to wall stud spacing. Expose half width of each stud to facilitate re-installation of wall board patch. **IMPORTANT: Avoid any utilities located in wall!**

3. Fabricate a support frame structure from suitable wood pieces as shown in **Figure 2b**. Support frame width (D) should fit snugly within wall studs. Support frame height (E) should be from 24-32" (61-81cm) high or more, depending on material and stiffness of wall studs. Locate cross member (F) to position in line when rail is located at the height (H). Hold the support rail against the support frame to confirm the cross members are in the correct location. Use a generous quantity of wood screws and glue to hold the support frame structure together as shown. See alternative to support frame as shown in **Figure 3**.

4. Insert support frame structure through hole in wall and secure uprights to wall studs using a generous amount of wood screws.

5. Complete the Invisia™ Towel Bar installation instructions on Page 2. Then, patch the wall cutout (if backside access to bathroom, consider making an access panel for future servicing) to match the surrounding wall as shown in **Figure 4**.

Figure 1a. **Figure 1b.**

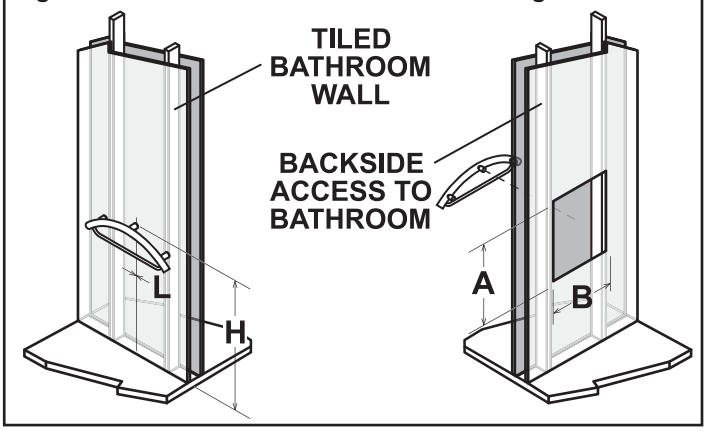

Figure 2a. **Figure 2b.**

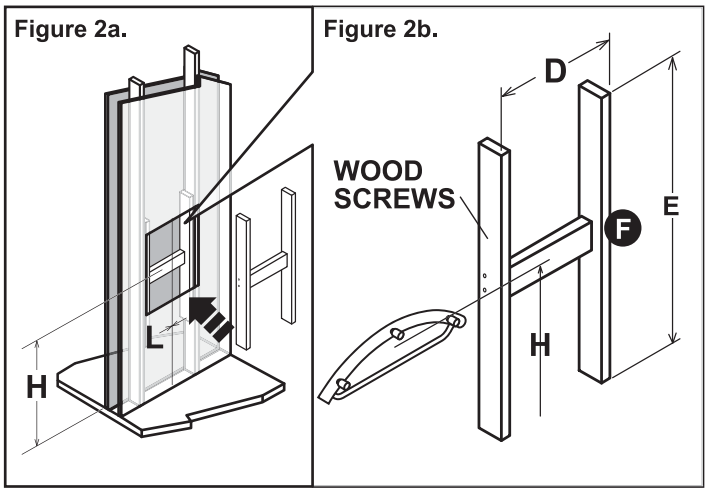

FIGURE 3: ALTERNATIVE TO SUPPORT FRAME - MULTI-LAYER PLYWOOD INSIDE WALL WITH WALLBOARD PATCH (TOP VIEW)

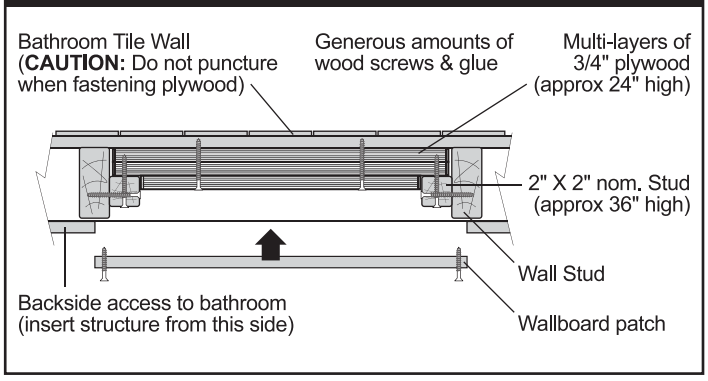

Figure 4.

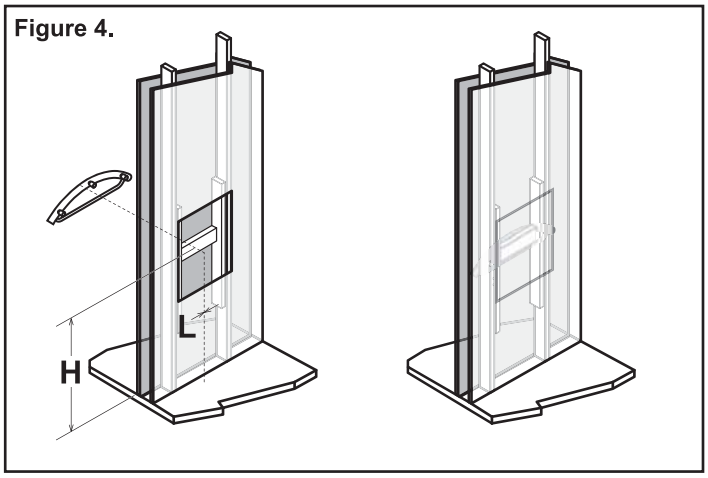

INVISIA™ TOWEL BAR, 16" / 41cm

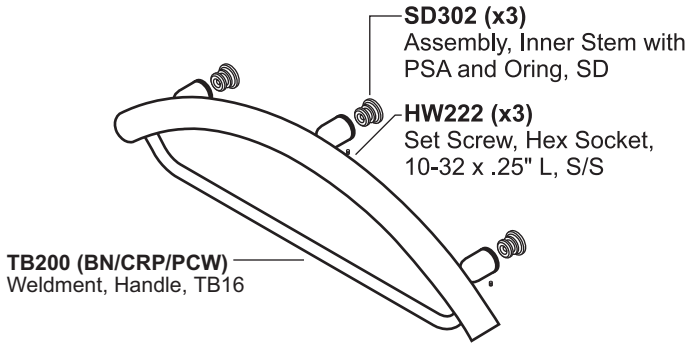

DIMENSIONAL DRAWINGS

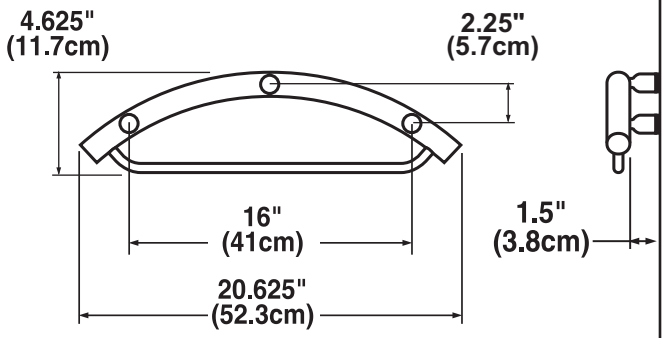

INVISIA™ TOWEL BAR, 24" / 61cm

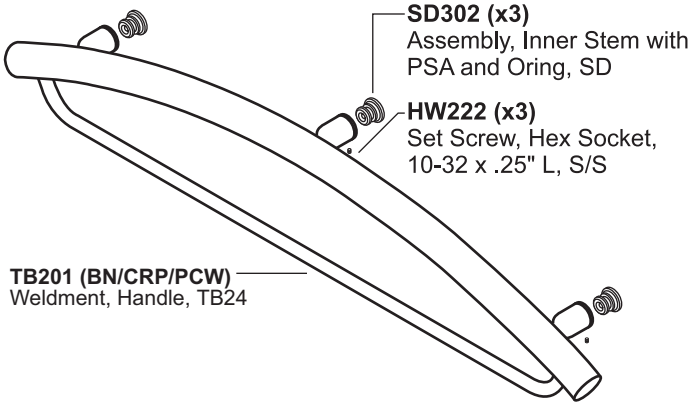

DIMENSIONAL DRAWINGS

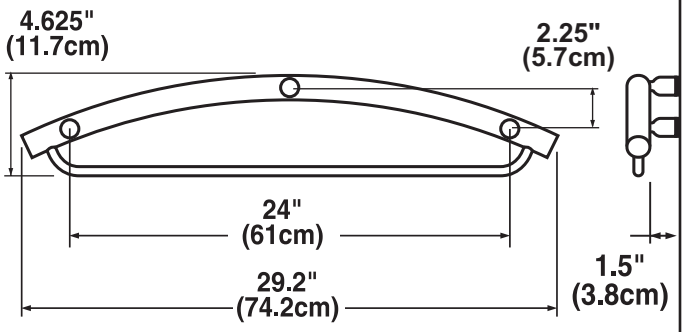

HARDWARE

HW175
Screw, PPH WS, #10-12 x 3", S/S
x3

HW174
Screw, PPHMS, #10-24 x 3", S/S
x2

HW177
Washer, Lock, Split, #10 18-8 S/S
x3

SD107
Bar, Center Punch, SD
x1

HW300
Hex-Key, 3/32 in., Short Arm
x1

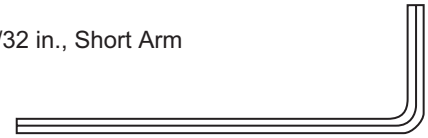
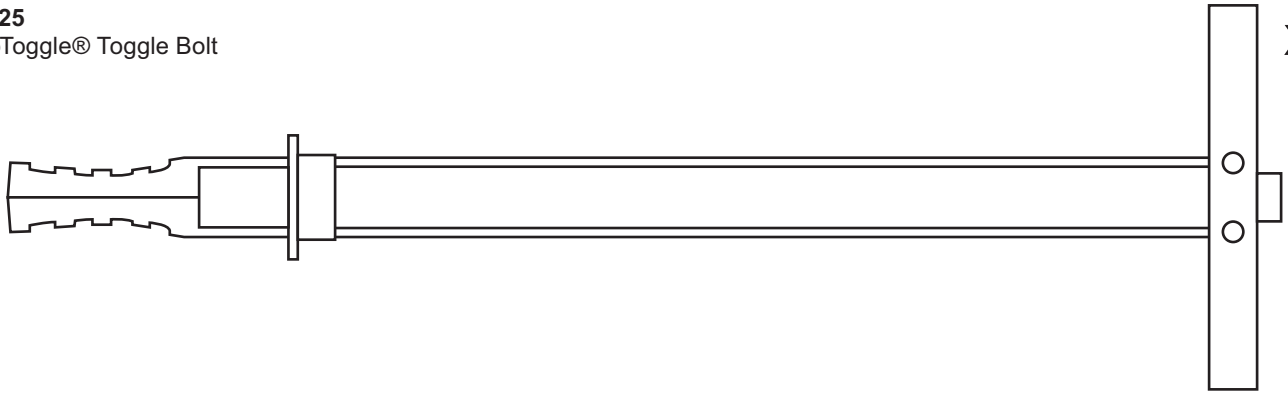
HW225
SnapToggle® Toggle Bolt
x2